Product Instruction

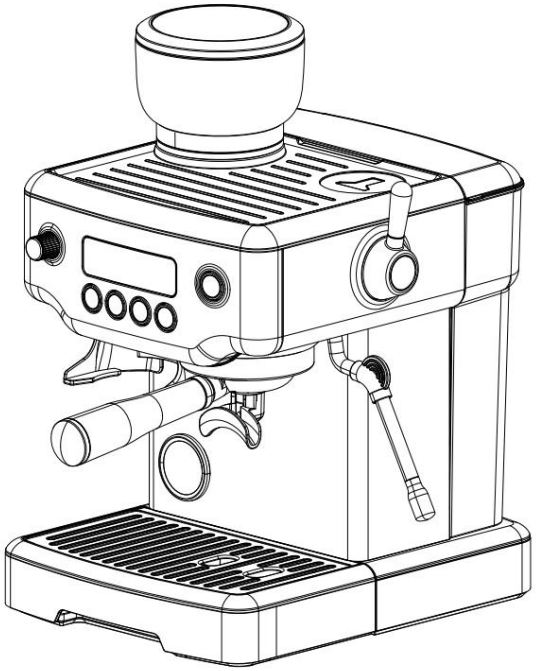

Item	AVX EM3701
Voltage	220V～240V
Frequency	50/60Hz
Power	2200W+150W
Coffee machine power	230V 2200W
Grind-bean motor power	220-230V 50/60Hz 150W
Water tank	2.1 L
Pressure	15Bar

Safety Instructions

Please read this manual carefully and comply the following procedure before using this machine:

1. Before use, please check whether the voltage used is consistent with the product nameplate;
2. The coffee maker must be connected to a ground outlet;
3. Use the coffee machine should be monitored, do not let children and incapacitated people near the coffee machine;
4. Do not place the coffee maker on a hot surface or near the open flame to avoid damaging machine;
5. Unplug the coffee machine before using it or cleaning it. Let it cool before installing or removing parts or cleaning it;
6. If the coffee machine is out of order or can not work properly due to other reasons, please take the coffee machine to a qualified service provider for testing and repair;
7. If the power cord is damaged, it must be replaced by a professional from the manufacturer, its maintenance department or similar department to avoid danger;
8. When the coffee machine failure, please do not use non-designated manufacturers of components, which will cause harm to users or potential danger;
9. Coffee machine should be placed on the table or flat place, do not hang the power cord on the edge of the table or table;
10. Make sure the power cord does not contact with the hot part of the coffee machine.
11. Coffee machine work, some parts will be heated to high temperature (such as steam generated, funnel support, steam pipe nozzle, high-pressure funnel, etc.) do not touch the use, use please hold the funnel handle;
12. Do not immerse the coffee maker or power cord plug in water or other liquids;
13. Do not put the machine in the temperature below zero in the environment, because the boiler and the water pump have residual water, become ice will damage the machine;
14. When adding water to the water tank, pay attention to the highest water level, shall not exceed the“Max” marking line;
15. In the event of failure, defects or suspicious defects due to machine drop, should immediately unplug the Power Plug, do not operate the machine in question;
16. The equipment is used for household and similar applications, such as: shops, offices and other working conditions of employees in the kitchen area;Not to be used outdoors;
17. Please save this manual for future reference.

HOUSEHOLD USE ONLY

Accessories:

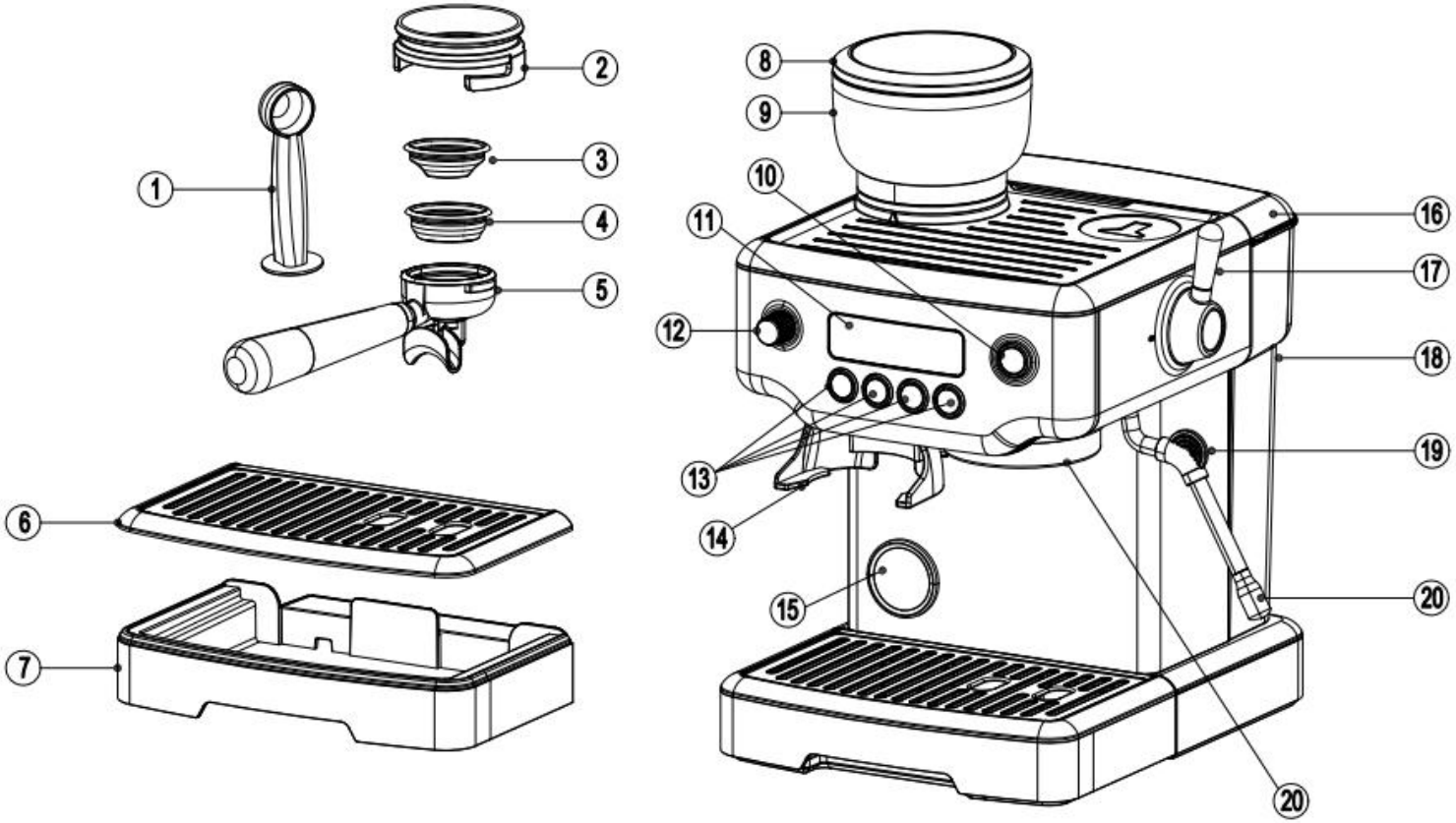

1. Coffee spoon 2. Powder ring 3. Single cup filter 4. Double cup filter 5. Funnel 6. Waste water tray cover

7. Waste water tray 8. Bean hopper cover 9. Bean hopper 10. Power switch 11. Display screen 12. Adjustment knob

13. Function button 14. Funnel bracket 15. Pressure gauge 16. Water tank cover 17. Steam knob 18. Water tank

19. Steam pipe handle 20. Brewing head

Warning: The machine must use a grinding Coffee powder and just make coffee, coffee drink(ex: Cappuccino, Latte and so on), heating milk, and other irregular use may cause danger.

Ground coffee beans Instruction manual

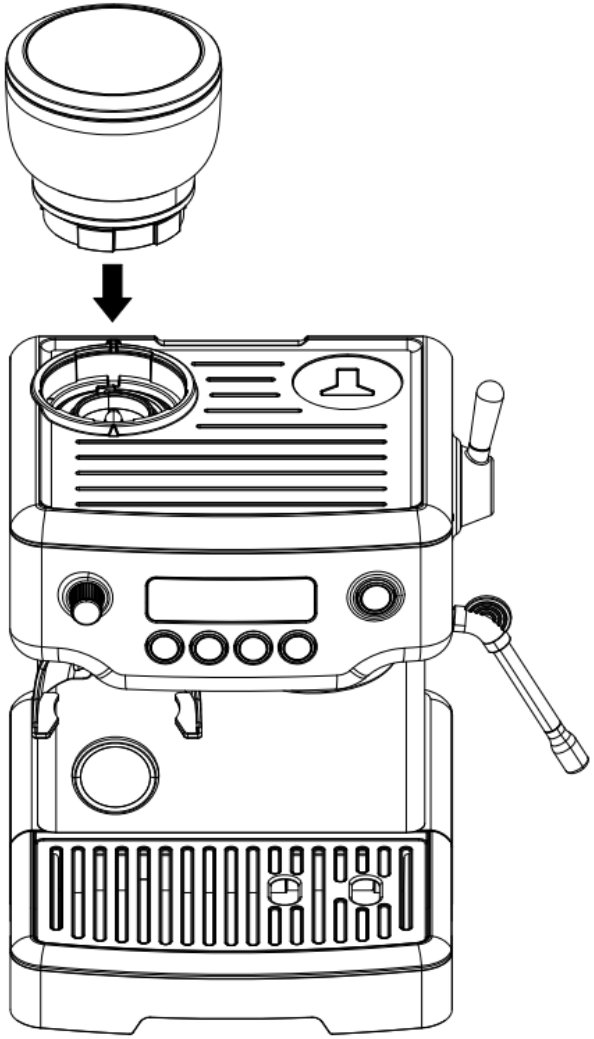

1.Load the bean bin assembly into the coffee maker.

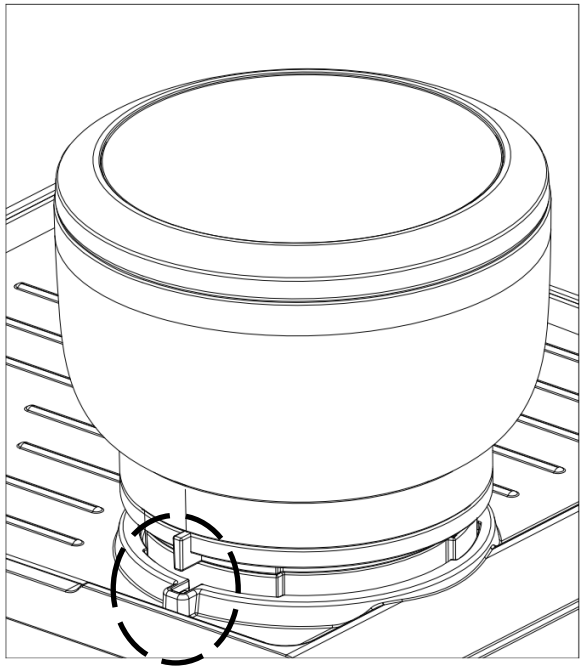

2.The position of the circle in the figure is aligned, press down and rotate clockwise into the bean box.

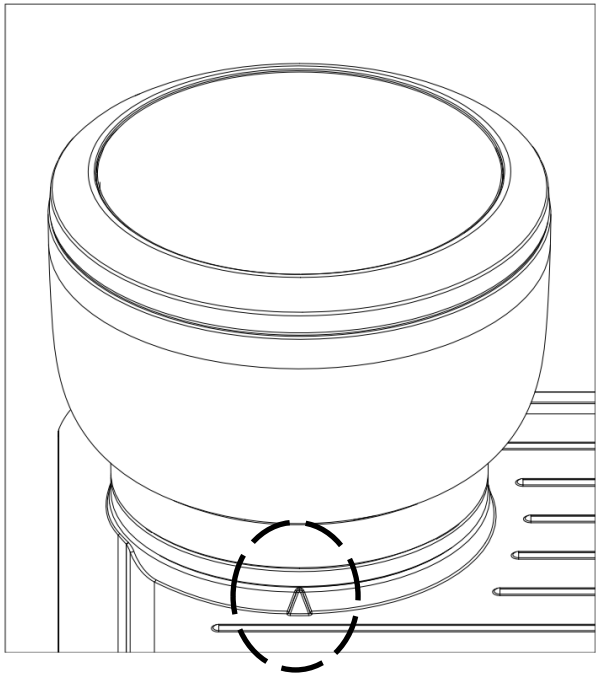

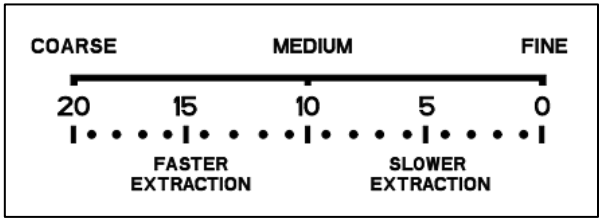

3.The scale line on the bean box is used to adjust the grinding thickness. The scale line on the bean box is aligned with the mark on the top cover, and the circle mark.
Note: The thickness mark on the bean box, the larger the number, the coarser the powder particles, and the finer the vice versa.

4. After ensuring that the bean bin components are installed in place, the bean grinding key indicator is steady on, and the screen displays the bean grinding interface (standby interface as shown below), it indicates that the bean grinder is ready for normal use.

Note: If the bean bin component is not installed, the time of the bean grinding interface on the left side of the screen flashes, and the bean grinding function key cannot be used. Check whether the bean bin component is installed properly.

Standby Screen

5. Pour the appropriate amount of coffee beans into the bean box, it should be noted that the maximum amount of coffee beans should not exceed 200g; (If the appliance is operated continuously for 5 minutes, the appliance must rest for 30 minutes), close the lid of the bean box;

6. Rotate the bean box to adjust the powder thickness, first adjust the scale 10 grinding beans when using for the first time, and then combine extraction pressure and coffee liquid flow rate to adjust the thickness;

7. As shown below, place the connecting ring into the funnel, lock it clockwise, and then place the funnel assembly into the funnel rack .

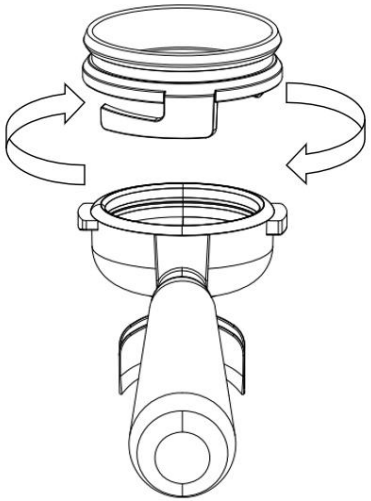

Installation method

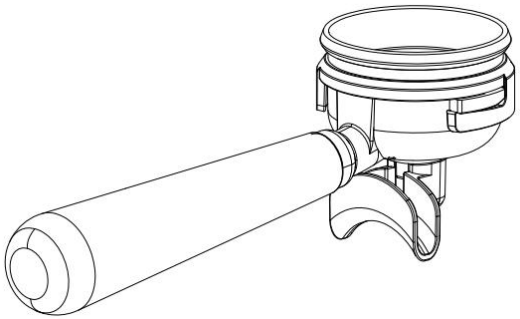

Installation status

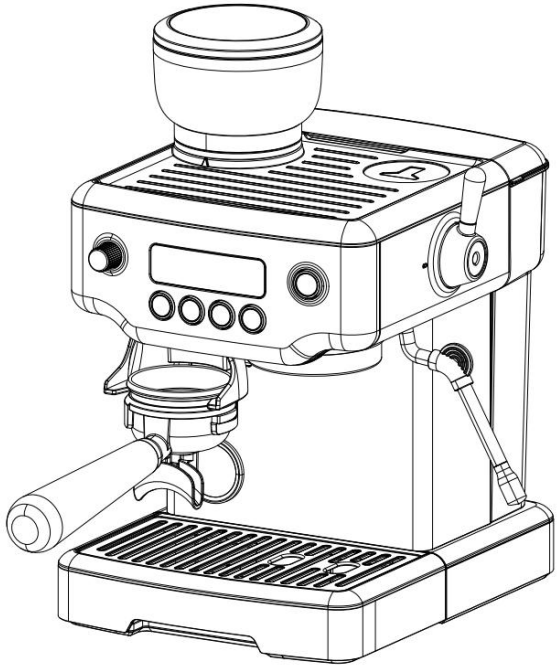

Loaded into funnel rack state

8. Rotate the knob " " to adjust the time, press the start key" "to start work after confirmation, reach the set bean time automatically stop, you can also press the grinding key" "to stop.

Warning: By pressing the rotary knob " ", you can choose the amount of single cup grinding and double cup grinding . The machine defaults to 8 seconds for single cup powder and 12 seconds for double cup powder.

Grinding tips

1. If the powder is too fine, it will lead to excessive extraction of coffee, which may result in intermittent coffee flow or no coffee, and the taste is bitter;

2. If the powder is ground too coarse, the water flows through the coffee powder too fast, resulting in insufficient coffee extraction, affecting the rich aroma and taste of the extracted coffee;

3. The gear of the bean grinder is different due to different types of beans, baking degree and freshness, and it is not static. Still need to make appropriate adjustment to achieve the best extraction effect;

4. When the new machine is used for the first time, it is recommended to adjust the grinding gear to 10, and grind a little powder to understand the thickness of this file. If the powder is obviously too thick to adjust the gear to (small value), such as too fine to (large value) adjustment;

5. Adjust and grind the right coffee powder, the pasta should look like pepper, no obvious graininess. Put the powder in the coffee bowl and adjust it to the extraction pressure.

6. Then by observing the pressure gauge, the extraction pressure is appropriate.

Warning: It is recommended that the extraction pressure should be 8~12 pa, and the coffee liquid flow rate is slow and the oil is fine for the better effect. If the extraction pressure is low or high, it is necessary to adjust the thickness of ground beans to achieve the best extraction effect.

Maintenance

1. In order to maintain the aroma of coffee and avoid the deterioration of ground coffee, empty the ground coffee container after each use;

2. Be sure to remove the power plug before cleaning;

3. Do not insert the grinder, power cord or plug into the water;

4. Do not use strong cleaners or abrasive pads to clean the machine;

5. If you want to disassemble the upper grinding wheel, please hold the handle of the upper grinding wheel and turn it counterclockwise, then lift it vertically, and clean the upper grinding wheel with a cleaning brush.

Warning: The first use of the grinder is prohibited from idling range: 0-5, 0-5 gear can be adjusted after adding coffee beans .

Extracted coffee Instruction manual

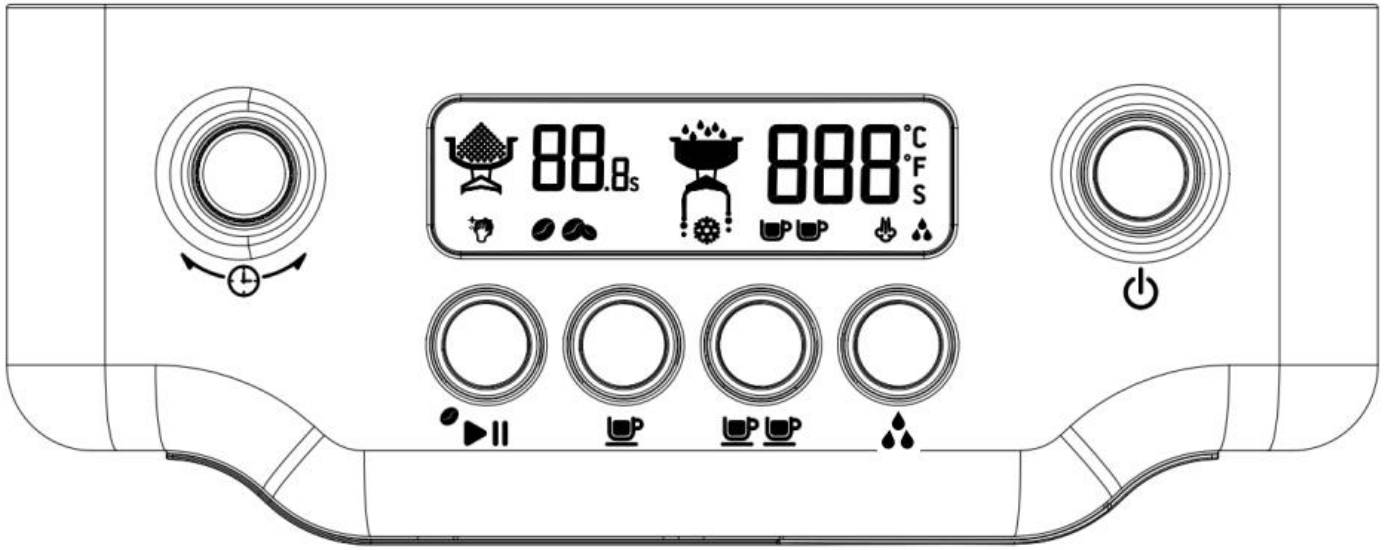

- “ ⏻ ”Power button, press to start, electromagnetic pump first water for 3 seconds,The machine starts to warm up at the same time - in the process of heating up “ ⏻ ” and “ ●▶II ” the key indicator light is always on， “ ☕ ” “ ☕☕ ” “ 💧 ” the key indicator is flashing；After the preheating is over, the above 5 lights are always on. Click again during or after preheating to turn off;
- “ ⊖ ” Function adjustment knob, in the standby state, press the knob button, you can switch to double cup grinding mode, and then press to switch back to single cup grinding mode;

Turn this knob to the left to reduce the grinding time, and turn this knob to the right to increase the grinding time. (The original program defaults to 8s for single-cup grinding and 12s for double-cup grinding)

- “ ●▶II ” Grinding key, in the standby state, press this key to start the machine work, when the grinding to the set time, the machine automatically stop working and return to standby;

- “ ”Single cup coffee key, in the standby state, press this key to start the machine to work, when the extraction to the set time, the machine automatically stop working and return to standby;
- “ ”Double cup coffee key, in the standby state, press this key the machine starts to work, when the extraction to the set time, the machine automatically stops working and returns to the standby;
- “ ”Hot water function key, in the standby state,press this key the machine starts to work, when the hot water reaches the set flow, the machine automatically stops working and returns to standby;
- Steam knob: The knob points ,steam knob is closed, turn the knob, steam pipe out steam；

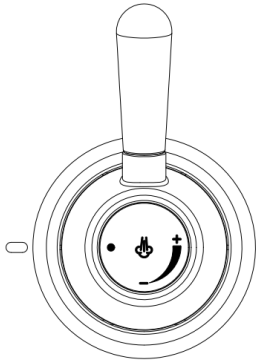

Off position

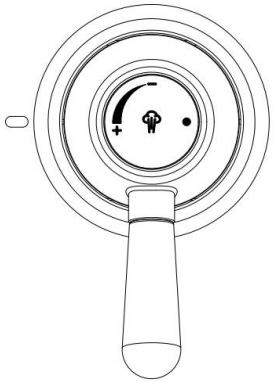

On position

- Remark：
- When the power is turned on, the buzzer rings three times, the screen“ ”the icon flashes quickly and the screen displays“E-1”.That is, the steam knob is in the open position, and the steam knob can be turned to the closed position.

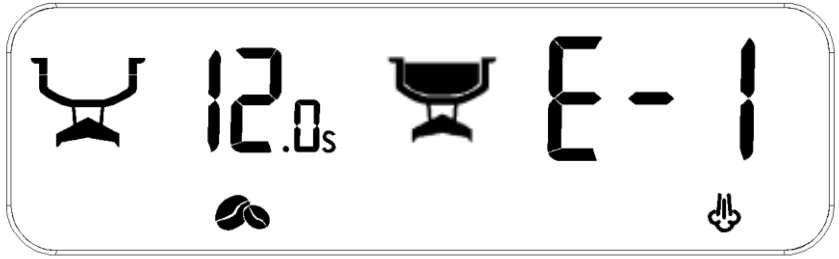

- Hold down the “ ”Single Cup button or “ ”Double cup button at the same time for 3 seconds to switch degrees Celsius or Fahrenheit.
- Restore factory Settings: Press and hold “ ” and“ ”at the same time for 3 seconds (buzzer reminder), the coffee machine to restore factory Settings.

A. Initially Using (Important)

1. Open the package and take out the coffee machine, check whether the accessories are complete, and clean all detachable parts;
2. Take out the water tank and remove the red silicone cap from the water outlet.

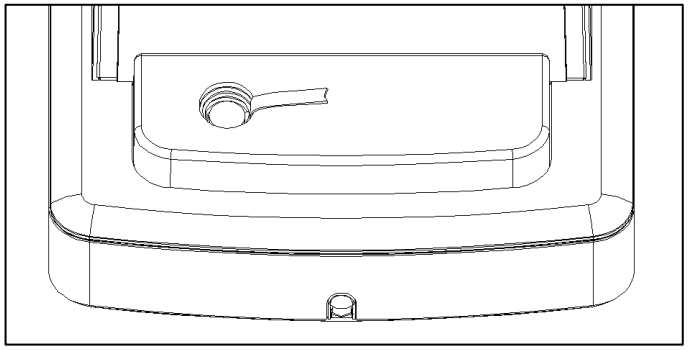

3. In order to ensure the pure taste of the coffee made for the first time, you need to clean the coffee machine and all detachable parts, the specific steps are as follows:

1）Fill the water tank, be careful not to exceed the maximum water level, and then put back on the machine, and cover the water tank cover;

2）Hold the upper part of the machine with your hand, hold the handle of the funnel, and screw the high-pressure funnel assembly from the position“ ”

counterclockwise to the position“ ”. There is no need to add coffee powder in the high-pressure funnel. (High pressure funnel must be tightened)

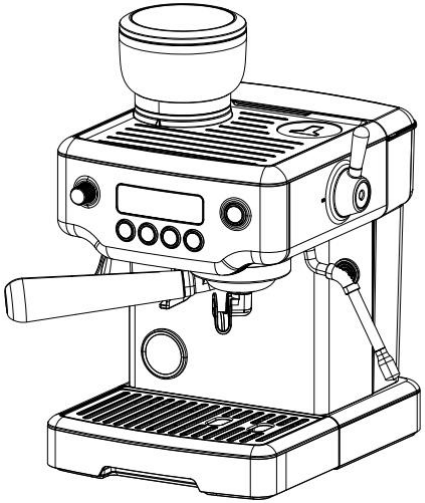

“ ”Open position

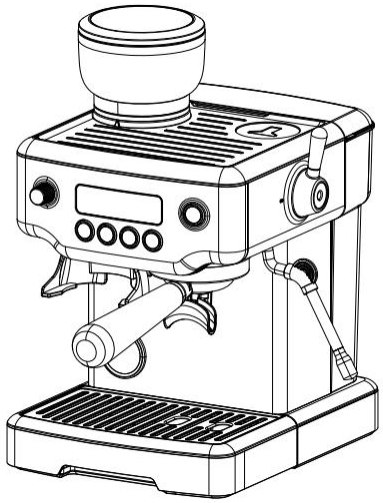

“ ”Locking position

3）Place the coffee cup on the movable water tray and align it with the coffee outlet.

4）Insert the power cord into a grounded socket;

5）Press the power switch, the electromagnetic pump first pumped water for 3 seconds, while the corresponding indicator lights are blinking, the machine began to preheat, when the indicator becomes steady on, the preheating is completed;

6）Press the hot water key“ ”, produce the right amount of hot water, clean the hot water pipe (please note that the hot water pipe should be aligned with the water tray or use the cup to connect the water, so as not to burn);

7）Press the double cup coffee key“ ”to clean the machine pipe (please be careful not to touch the handle outlet, so as not to burn);

8）Flip the steam rod to the open position, steam out for about 1 minute and then close (clean the steam boiler and pipe);

9）After the water stops flowing out, pour out the water in the water tray.

B. Make Espresso Coffee（Double-cup Coffee for example）

1. Open the lid, take out water tank, and pour appropriate water into tank. Do not exceed the MAX capacity;
2. Put back the water tank and close the lid;
3. Plug in the plug, press the power button“ ”, the indicator“ ”“ ”“ ”the machine began to preheat, about 1min, all the lights are steady on, the preheating is complete;
4. Rotate the bean box to adjust the grinding gear 10, add 18 grams of coffee beans into the bean box, install the coffee funnel on the powder holder, press the bean grinding key“ ”to start grinding beans, if there are still beans to grind after stopping, you can press the point to grind beans to grind all coffee beans;
5. Press the coffee powder evenly with the press hammer, and remove the coffee powder at the edge of the filter after compaction;

Note: If too much coffee powder remains in the edge of the filter screen, easy to cause poor sealing and leakage.

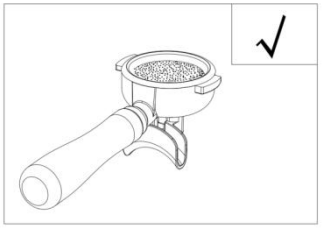

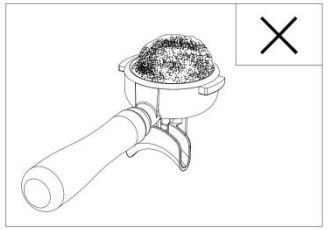

6. Put your hand on the top of the machine and hold the handle of the funnel from position " " to position " " (must be tightened);
7. Put a cup on the drip tray cover ;
8. Press the double cup of coffee button“ ”, Double coffee indicator“ ”the breathing light changes from blinking to steady on,start making espresso；
9. The coffee machine stops working automatically（indicator“ ”“ ”“ ”always light），the coffee is finished, and then remove the coffee cup；

Warning: Do not leave the coffee machine unattended during the coffee making , as it sometimes requires manual operation.

10. After making the coffee, turn clockwise to remove the high-pressure funnel assembly, clean the coffee grounds in the filter cup and rinse with hot water. Press a single or double coffee button and run water to rinse the coffee grounds out of the outlet.

11. When making a single cup of coffee, select a single cup of coffee filter, press the single cup of coffee switch “ ”when making, the other steps are the same as making a double cup of coffee.

Warning: Be careful of high temperature parts when in use. Especially, the water outlet (funnel bracket) , hot water nozzle and steam making mouth. Please do not put your hand on the above section for any reason..

★ Steam function

1. Please clean the steam pipe first, align the steam pipe with the water tray, and turn the steam knob to the open position in the standby state to run the steam function. First empty the remaining water in the tube, and then turn the knob to the off position when steam comes out, exit the steam function, and return to the standby state.

2. Please use fresh and refrigerated whole wax milk. Different brands and types of milk produce different milk bubbles.

3. Pour the appropriate amount of milk into the foam cup;

4. Insert the steam tube into the milk surface about 1-2cm, close to the right end of the cup handle at 3 o 'clock. Turn the knob to open position;

5. Keep the nozzle of the steam pipe under the surface of the milk until the milk begins to swirl clockwise;

6. As the milk rotates, slowly move the foam cup down so that the steam nozzle is near the surface of the milk and brings air into the milk to make the milk foam easier to form;

7. Move the milk foam cup upward slightly, so that the steam tube nozzle goes deep under the milk surface, and keep the milk rotating until the desired dense milk foam is obtained. Turn the knob to standby, and then move the milk foam cup out of the steam tube.

Tips

1. After making the milk foam, please spray the steam empty, remove the residual milk in the steam pipe, and clean the outside of the steam pipe with a damp cloth, but be careful to prevent burns;

2. The maximum use time of steam function is 3 minutes. After using this function, please turn the knob to the standby gear.

★ Making Hot Water

Hot water function can be used to warm cups and hot water. If you need to use hot water, in standby state, press the hot water function key“ ”, the hot water indicator flashes, and the hot water nozzle ejects hot water. To stop the hot water, press the hot water function key“ ”bit again to return to the standby state.

Tips:

1. The hot water runs according to the set flow rate, and the machine automatically stops the hot water function after reaching the set flow rate;
2. When using a container to connect hot water, pay attention to the size of the container or someone to guard the use;

★ Machine program setting

The machine has the function of program customization, users can customize single/double cup grinding bean time, single/double cup coffee extraction time setting, PID extraction temperature and hot water flow setting. After entering custom mode, if there is no operation within 5 seconds, the machine will exit the mode and return to standby.

1. Set single/double cup grinding time

① In the standby state, by pressing“ ”to rotate the knob, you can choose single cup grinding amount“ ”or double cup grinding amount“ ”;

② Rotate the “ ” knob to adjust the single/double cup grinding time. The machine saves the current grinding time as the default grinding time.

Note: Single cup grinding time is effectively set 3-20 seconds, double cup grinding time is effectively set 8-30 seconds.

2. Set single/double coffee function

① The coffee Settings screen is displayed

In the standby state, hold down the Single cup coffee button“ ”or Double cup coffee button“ ”for 3 seconds to enter the setting screen of the pre-soak

function. At this time, the indicator of the key blinks and the funnel icon“ ” on the screen blinks. Press “ ”to rotate the knob to enter the coffee extraction time interface, and the“ ”funnel icon on the screen flashes; After the value is adjusted to the required value, wait for 5 seconds and automatically save the value and return to the standby screen.

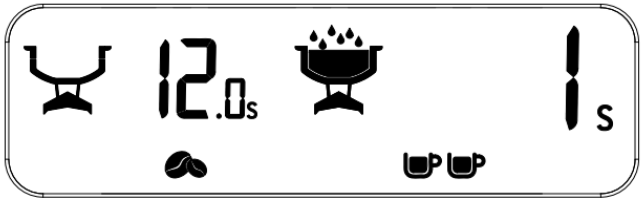

Pre-soaking function setting screen

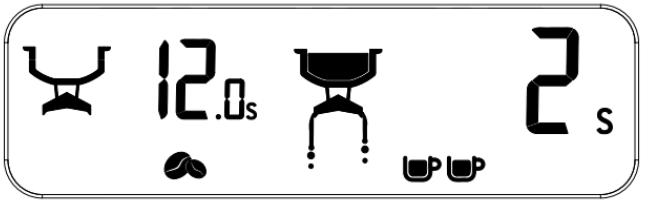

Coffee extraction time interface

② Set the pre-soak time for single/double cups of coffee

In the pre-soaking setting state, rotate the“ ”knob to adjust the pre-soaking time of one or two cups of coffee, and the machine will automatically save the setting after adjustment.

Note: The total pre-soaking time is 5 seconds, and the set value is 1 to 4 seconds.

For example: when the value is set to 3 seconds, the boiling head water for 3 seconds when working, stop for 2 seconds, and then enter the normal extraction of coffee.

③ Set the extraction amount for single/double cups of coffee

Under the setting state of coffee extraction amount , rotate the “ ” knob to adjust the extraction amount of single/double cups of coffee, increase/decrease by 10ml, and the machine will automatically save the setting after adjustment.

Note: Default extraction amount for single cup of coffee: 30ml, adjustable range: 20~100ml, default extraction amount for double cup of

coffee: 60ml, adjustable range: 50~150ml.

3. Set the hot water function

① Enter hot water Settings

In the standby state, hold down the Hot water function key“ ”for 3 seconds to enter the hot water flow setting screen, and the indicator blinks.

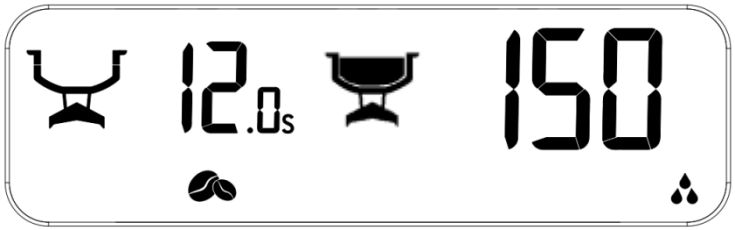

Hot water flow setting screen

② Set the hot water flow

Under the hot water flow setting state, rotate the“ ”knob to adjust the hot water flow, increase/decrease by 50ml, adjust to the required value, wait for 5s to automatically save and return to the standby interface.

Note: Hot water flow setting range: 50~300ml.

4. Coffee temperature and steam temperature settings

① When the machine is preheated and in the standby state, long press“ ”“ ”for 3 seconds to enter the coffee temperature setting interface, press“ ”again to enter the steam temperature setting interface, adjust the value to the required value, wait for 5s to automatically save back to the standby interface and save. (If you click“ ”again, it will cycle to the coffee temperature setting interface.)

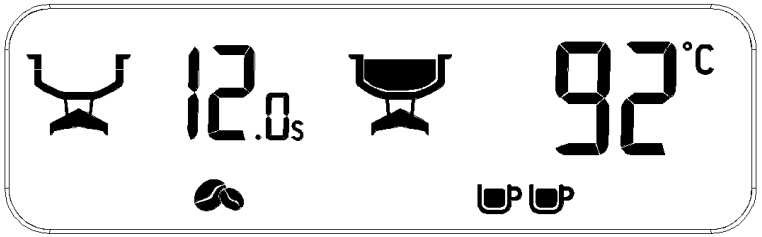

Coffee temperature setting interface

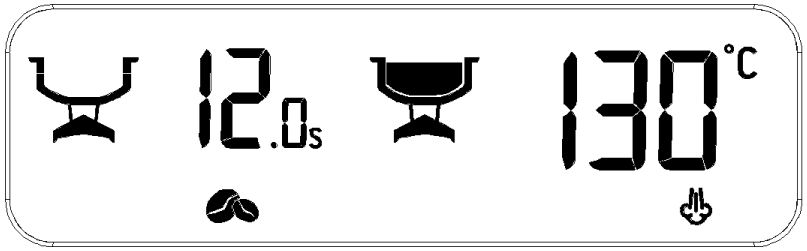

Steam gear setting interface

② **Set coffee temperature**

In the coffee temperature setting state, rotate the“ ”button to adjust the coffee extraction temperature, increase/decrease at 1℃, adjust to the required value, wait for 5s to automatically save and return to the standby screen and save, or press the“ ”button again to enter the next adjustment screen.

Note: Temperature setting range: 25℃ (cold brew coffee temperature), 91~95℃ (normal extraction coffee temperature range)

③ **Set steam gear**

In the steam gear setting state, rotate the“ ”button to adjust the steam gear, increase/decrease at 5℃, adjust to the required value, wait for 5s to automatically save and return to the standby interface and save, or press the“ ”button again to cycle to the next adjustment interface.

Note: Steam gear setting range: 130~150℃.

★ Other function description

1、High temperature warning

In the standby state, set the temperature of the extracted coffee to 25℃ (cold brew function), the screen displays“E-2”, “ ”icon blinks to indicate the high temperature warning, press“ ”hot water function key at this time, and let the boiler release hot water to cool down. When the screen displays“25℃”, it means that the cooling has been completed, and the cold brew can be made.

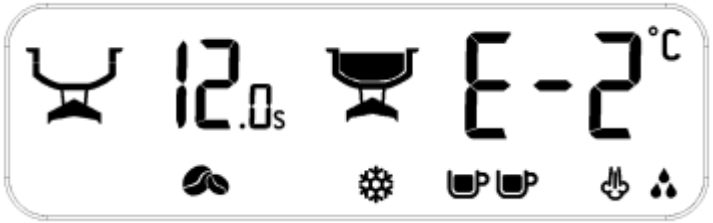

High temperature warning

Cold brew standby screen

Note: In the standby state of cold brew function, set the extraction coffee temperature to the hot extraction function (91~95℃), the machine will re-preheat, and return to the standby state of the set temperature after preheating.

2、Bean grinding machine micro open circuit

In the standby state, the " " grinding bean pattern and" "button on the left side of the display flash reminders, in this state, press the" "button, the grinding bean machine does not work.Please refer to the preceding "Operation Guide for Ground Coffee beans" to check whether the bean warehouse is installed in place. If a reminder is still displayed after installation, please contact the authorized service.

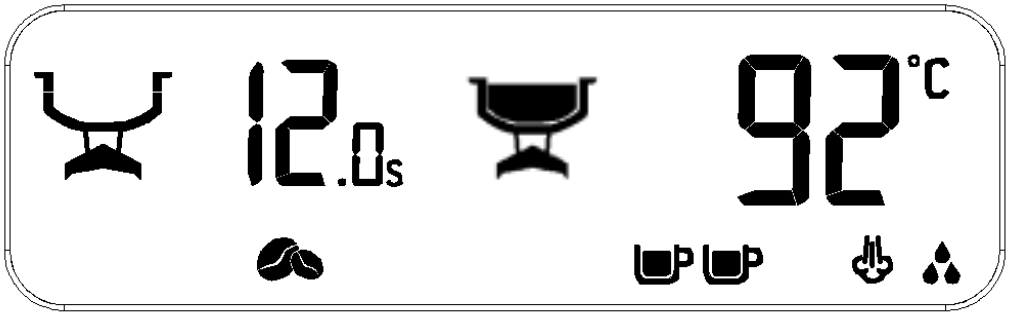

Cleaning and Maintenance

1、Machine cleaning

① Before cleaning, disconnect the power plug to allow the coffee machine to cool sufficiently；

② Clean the stainless steel surface with a clean damp cloth；

Note： Do not use alcohol or solvents, and do not immerse the machine in water for cleaning；

③ Use a coffee machine specific brush to clean the water outlet and internal sealing ring；

④ Remove the high-pressure funnel assembly by rotating it clockwise, pour out the coffee grounds inside, and then clean the filter and funnel with cleaning solution, but be sure to rinse with clean water at the end；

⑤ Clean all accessories in water and thoroughly air dry；

⑥ Regularly empty and clean the drain and waste tray covers；

⑦ Regularly clean the water tank.

2、Descaling remind and instructions:

This product has the function of descaling reminder: When the system detects that the whole machine has been used for 100 times, the descaling icon“ ”in the lower left corner of the screen is displayed to remind the user to descaling, which requires the user's cooperation to complete.

(1) Descaling instructions

It is recommended to descale every 4-6 months or when the machine is reminded to descale.

Descaling options:

A. Coffee machine descaling tablets

B. Liquid scale remover

C. White vinegar and warm water

(2) Descaling cycle: Descaling cycle takes about 10 minutes to complete

Note: Before starting the descaling program, please complete the following descaling preparations before running the descaling program.

① Preparation for descaling

Add solution to the tank (choose one of three ways A/B/C)

A. Fill 1 liter of water into the tank. Add the descaling tablet and wait for the descaling tablet to dissolve;

B. Add half a cup of liquid detergent into the tank, and then inject 1 heating water to allow the solution to mix thoroughly;

C. Add 1.5 tablespoons of white vinegar to the tank, and then inject 1 teaspoon of heated water, allowing the solution to mix thoroughly;

① Place container

Place a 1 litre container under the boiling head and a 1L container under the steam pipe.

After completing the above steps, the descaling process can be started as follows:

In the standby state, press " " and" "at the same time to enter the descaling program, and the cleaning interface is displayed (as shown below).

Step 1: Descaling

(1) Turn the steam handle to the open position;

(2) Coffee pump and steam pump start to work, hot water will flow out from the boiling head and steam pipe, this process is about two minutes;

(3) After completion, the buzzer sounds, indicating that step 1 has been completed;

(4) Turn the steam handle to the off position.

Step 2: Clean and prepare

Important: Before the descaling process automatically exits, please complete the following work within 5 minutes;

(1) Pour out the remaining descaling solution, rinse the tank with clean water, and then add more than 1.5 liters of clean water to the tank;

(2) Empty the water tray and the water container and put it back in place.

Step 3: Start cleaning

(1) Turn the steam handle to the open position;

(2) Coffee water pump and steam water pump start to work, clean the boiler and internal pipelines, this process is about two minutes;

(3) After completion, the buzzer rings to indicate that the machine has completed this step;

(4) Turn the steam handle to the off position, the cleaning is completed, return to the standby screen, and the cleaning icon is not displayed.

Note: If the device automatically returns to the standby screen after 20s without any operation, the screen will display an E-1 message because the steam handle is in the down position at this time.Turn the steam handle to the off position to release, return to the normal standby interface.

Screen display

Display screen	Reason	Solution
12.0s	The microswitch of the grinding module is open	1.Check whether the bean bin assembly and coffee machine are installed in place;
E-1	When the steam knob is not turned off or the microswitch this line is open	2. If the screen is still blinking, please contact the authorized service.
E-2	In the standby state, the coffee extraction temperature is set to the cold brew function, and the machine is reminded of high temperature.	Tighten the steam knob or contact the authorized service
E-3	The thermistor of the coffee module is open	Refer to the high temperature reminder operation: at this time, press the single cup coffee key or double cup coffee key to let the boiling head put hot water to cool down, until the screen shows 25℃.
E-4	Coffee module thermistor short circuit	Please contact the authorized service.
E-5	The fuse of the coffee module is blown or the circuit board is faulty, causing the boiler to not heat	Please contact the authorized service.
E-6	Circuit board zero crossing circuit failure	Please contact the authorized service

E-7	Abnormal detection of water shortage flowmeter in water tank	1. Please contact the authorized service.
E-8	The thermistor of the steam module is open	1. Check whether the water tank is short of water, or whether the water tank is installed in place;
E-9	Steam module thermistor short circuit	2. If E-7 still appears at work after the above check, please contact the authorized service.
E-10	The steam module fuse or circuit board failure causes the boiler to fail to heat	Please contact the authorized service.
No Display	Power Off	Please contact the authorized service.
No Display	Standby for more than 20 minutes	Please contact the authorized service.

TROULBE SOLUTION

Problem	Cause/Result	Solution
No water comes out	Water tank is empty	Fill the tank with water and turn on the steam knob until hot water comes out continuously from the steam pipe.
	The input voltage or frequency is inconsistent with nameplate	Make sure the voltage and frequency is consistent with the nameplate.
	Machine malfunctions	Please contact with the authorized service.
No steam is generated	Steam nozzle clogged	Clean steam nozzle with needle.
	Water tank is empty	Add water to the water tank and turn on the steam knob until there is continuous hot water coming out of the steam pipe before making steam.
	Machine malfunctions	Please contact with the authorized service
Coffee overflows from the edge of the filter holder	Too much powder in the filter	Turn off the machine and wait for it cool down, clean the filter, then pour appropriate coffee powder.
	coffee powder residue on the sealing	

	ring of the funnel	
	Multiple operations, high hot water temperature, and vaporization phenomenon	Turn off the power and wait for the machine to cool down before restarting
	The issue still exists after performing the above operations	Please contact with the authorized service
Coffee cannot come out or flows out too slowly	coffee powder is too fine, and clogged filter	Replace with slightly thicker coffee powder after rinsing
	Filter holes are blocked	Clean the bottom hole with a brush or needle and clean with water
	The filter is blocked	Remove the filter with a screwdriver and clean the bottom hole of the filter with a brush or needle
	Water tank is not inserted	Insert the water tank into place
The bottom of the coffee machine is leaking water	Drip tray is filled up	clean the drip tray
	Machine malfunctions	Please contact with the authorized service
Machine is not working	The power cord is not plugged well.	Plug the power cord into a wall outlet correctly
	NTC is short circuit	Please contact with the authorized service
	Machine malfunctions	
The steam cannot froth	Steam indicator not light on	Wait steam indicator lights on
	The container is too big or the shape is not fit	Use high and narrow cup or garland cup
	Used skimmed milk	Use whole milk

If you cannot find the cause of the malfunction, do not disassemble the machine yourself. Please contact the authorized service center.

Environmental treatment

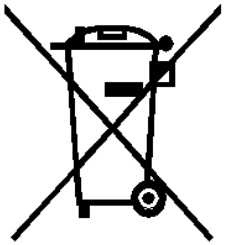

You can do your part to protect the environment!
Please remember to comply with local laws and regulations.
Hand over malfunctioning electrical appliances to an appropriate waste disposal center.